Towel Bar

Open Shelf

Matching Soap Tray and Mirror

Wood is intentionally distressed and accented with a Rustic Pine finish to create an antique design on a new piece of furniture

All Ronbow cabinets are made of solid hardwood or hardwood plywood and meet strict CARB Standards.
No particle Board or Micro-Density Fiberboard (MDF) are used.

## Available finishes:

Rustic Pine F19

## Available tops:

CERAMIC SINKTOP

CERAMIC UTILITY SINKTOP

STONE COUNTER

TECHSTONE™ TOP

WIDEAPPEAL™ TOP

TOP VIEW

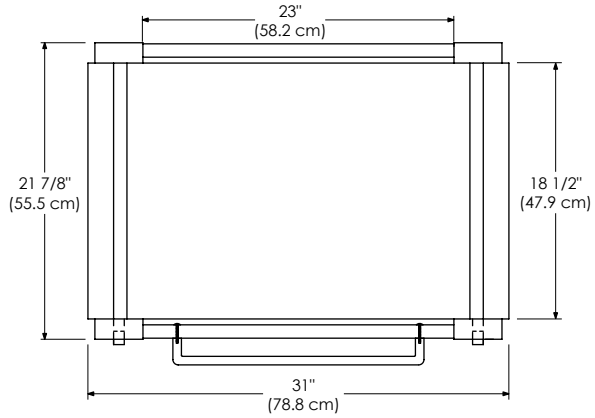


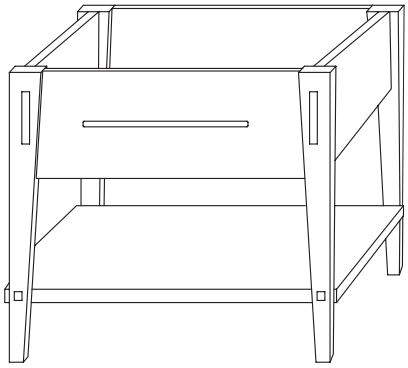

FRONT VIEW

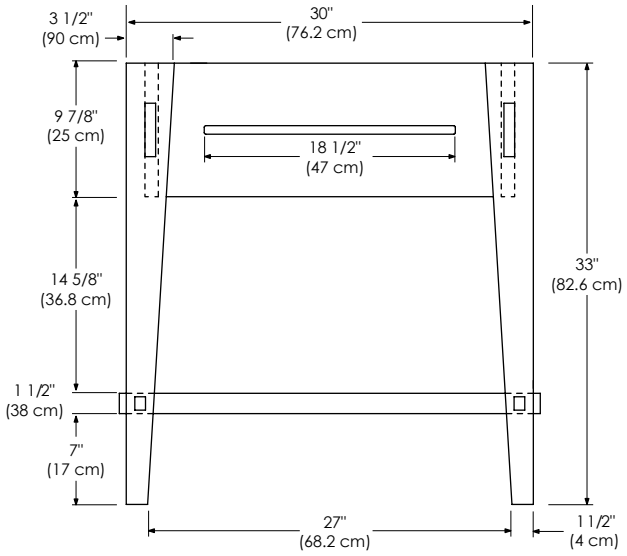


SIDE VIEW

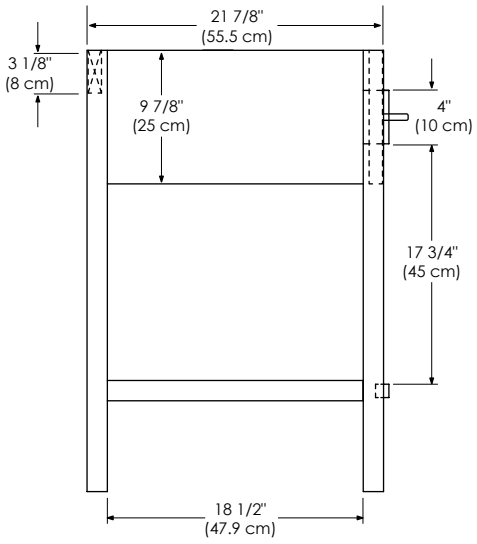


*By IAPMO, ceramic lavatory warpage is defective only if warpage of flat slab out of horizontal plane exceeds 6.3 mm/m (0.25 in/ft) on all sizes OR warpage on back of lavatories that are attached to the wall exceeds 3 mm (0.13 in).*